EvacU^{Elite} Dual Loop EIS Line Card

1. Description

The Dual Loop EIS Line Card (LILC) occupies 1 slot in the EvacU^{Elite} Universal Rack. Each LILC supports a maximum of 40 Warden Handsets comprising of 2 loop circuits connecting a maximum of 20 Warden Handsets per loop.

Each loop circuit requires (2 core UTP) Unshielded Twisted Pair field cabling wired in a loop configuration connecting a maximum of 20 Loop Warden Handsets over a maximum loop length of 1km. The distance between any two Warden Handsets should not exceed 500m.

The cable size recommended is 1.5mm^2 unshielded twisted pair

Multiple LILCs can be fitted and configured into each Universal Rack providing very efficient use of rack space to accommodate the largest of Warden Handset system requirements.

For every 40 Warden Handsets connected to the system there also needs to be **GUI capacity** to provide EICIE controls and indications for every EIS zone.

The LILC should be used in conjunction with Loop Warden Handset Item No **ASS63LWIPS.** See page 3.

Where a Warden Handset is installed in a lift application Ampac recommends using a Radial circuit connection. This is achievable using either the 6350-ILC Card using Warden Handset 'ASS63WIPS' OR 6350-LILC Card used with Warden Handset ASS63LWIPS configured as address 3 or 4 connected radially from Loop 2 terminals 1 & 2 or 3 & 4 respectively.

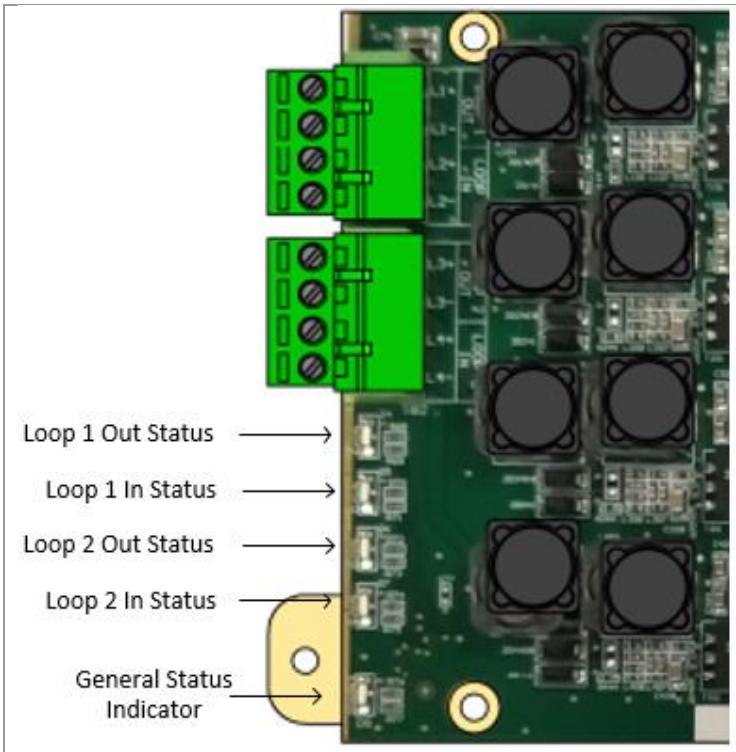

Loop Status Indicator

AMBER: Fault – short, open, overload

RED: power is present

In redundant mode – only the Out port will be active under normal conditions

General Status Indicator

OFF: cards have no power or processor is fault

FLASHING GREEN: board is operating, no faults

FLASHING AMBER: board has a fault condition

STEADY AMBER: Not receiving commands from the Distribution CPU

EvacU[Elite] Dual Loop EIS Line Card

2. Connections:

LOOP 1 OUT +	1
LOOP 1 OUT -	2
LOOP 1 IN +	3
LOOP 1 IN -	4

LOOP 2 OUT +	1
LOOP 2 OUT -	2
LOOP 2 IN +	3
LOOP 2 IN -	4

LOOP1/2 IN/OUT	Inputs for Ampac EvacU [ELITE] Loop Warden Handsets. Up to 2 Ampac MCPs can be connected to each handset. Maximum of 20 handsets per loop. Maximum length 1000m. Cable size recommended is 1.5mm^2 Unshielded twisted pair

Field Wiring - Use of Ferrite on LILC: One MIS3019 ferrite core is packed with each (6350-LILC).

The installer should connect both loops through the ferrite.

Parameter	Detail
No. of Loop Interfaces	2
Warden Handsets per Loop	20
MCPs per Warden Handset	2
Loop Length	1 km (max)
Signaling	Proprietary modulated digital over power
Loop Cabling	2 core unshielded twisted 1.5mm^2 (max)
Max Distance Between Warden Handsets	500m
No. of Racks Slots	1

EvacU[Elite] Dual Loop EIS Line Card

Current Consumption	0.050 Amps (quiescent, no phones connected), 0.360 Amps (20 phones connected to 1 loop), 0.650 Amps (40 phones - 20 phones connected to 2 loops)

3. Installation

a. Turn power OFF to the Universal Rack. Use the **EWCIE Power Switch** on the Primary PSU.

b. Observing anti-static precautions, install the card in the panel.

c. Ensure that the slot used in the panel is configured as LILC.

d. Ensure the correct quantity of loop Warden Handsets are configured on each loop interface.

e. Ensure the EIS Zone descriptors are all configured including the Master Warden Handset.

f. Use the Ferrite provided. Connect the field cables (both loops) through into the 8 connectors.

g. Fit all of the cards into the universal rack slots correctly.

h. Fit the rack cover plates which prevent dislodgement of fitted cards.

i. Turn power ON to the Universal Rack. Use the **EWCIE Power Switch** on the Primary PSU.

j. Test the functionality.

k. Use the GUI interface select Menu / Node / Rack & **Slot** screen to review the detailed LILC status.

For Items C, D & E please refer to the **Programming Manual** MAN3142

EvacU[Elite] Dual Loop EIS Line Card

Loop Handset Connections

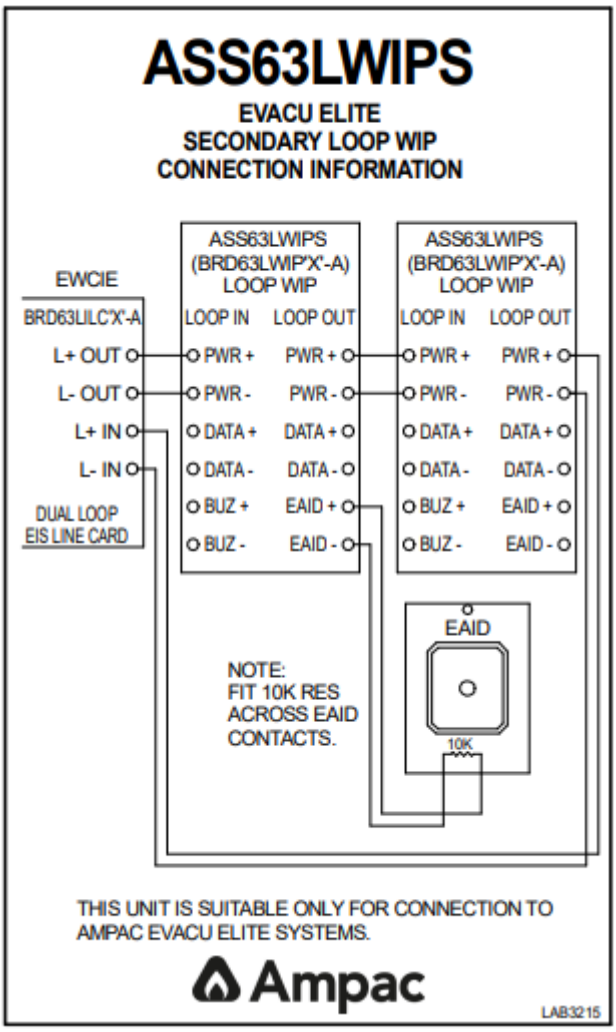

Set up unique dipswitch address between 1-20 on each handset respectively.

Same applies to both loop circuits.

EvacU[Elite] Dual Loop EIS Line Card